DOWNLOADER FOR ESP32-WROVER --- Designed by XiaoJ

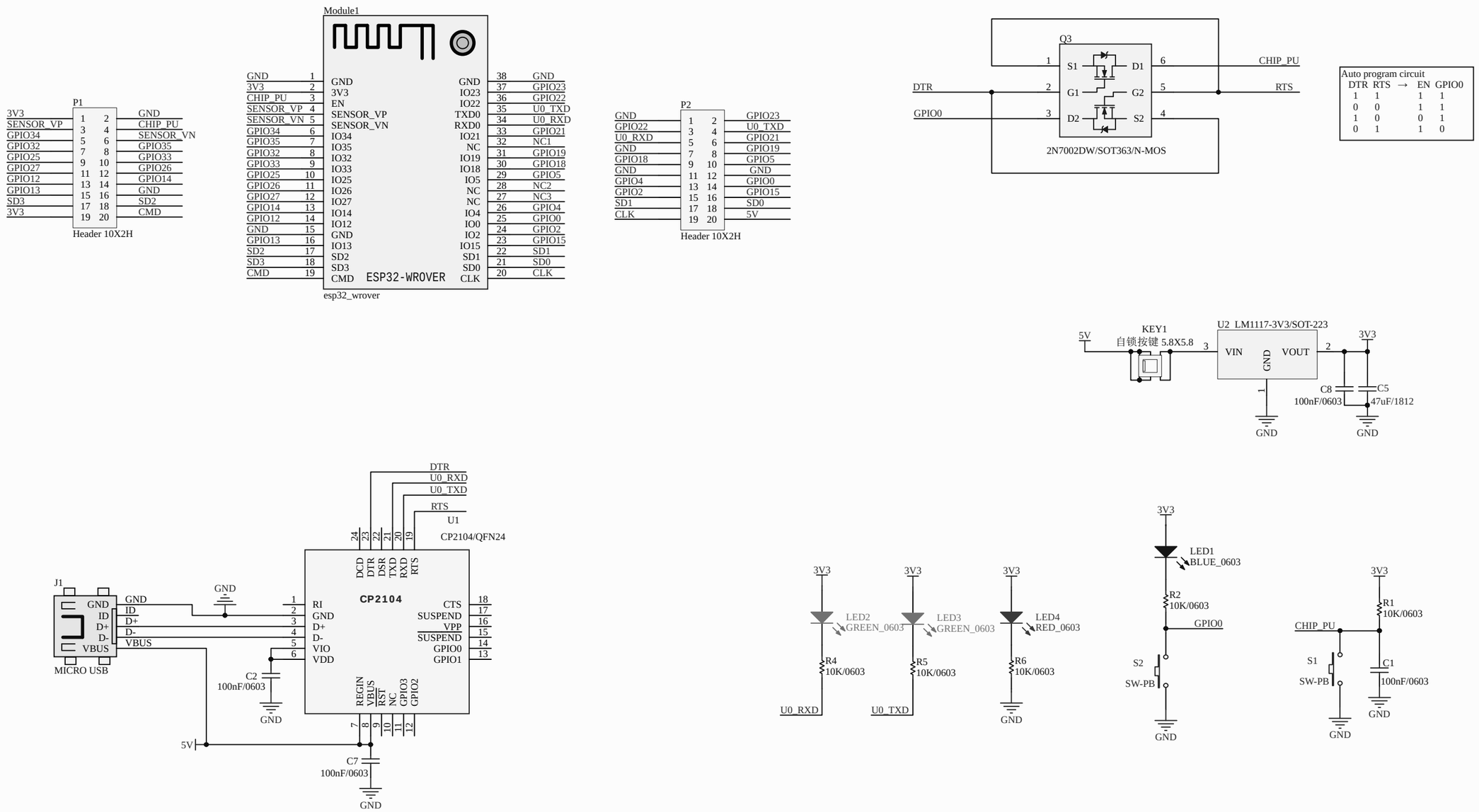

Title		
Size A3	Number	Revision
Date: 2018-02-25	Sheet of	
File: G:\work-2018\..\ESP32-WROVER下载器.SchDoc	Drawn By:	